NITROUS OUTLET — TWO BUTTON SWITCH PANEL WIRING DIAGRAM

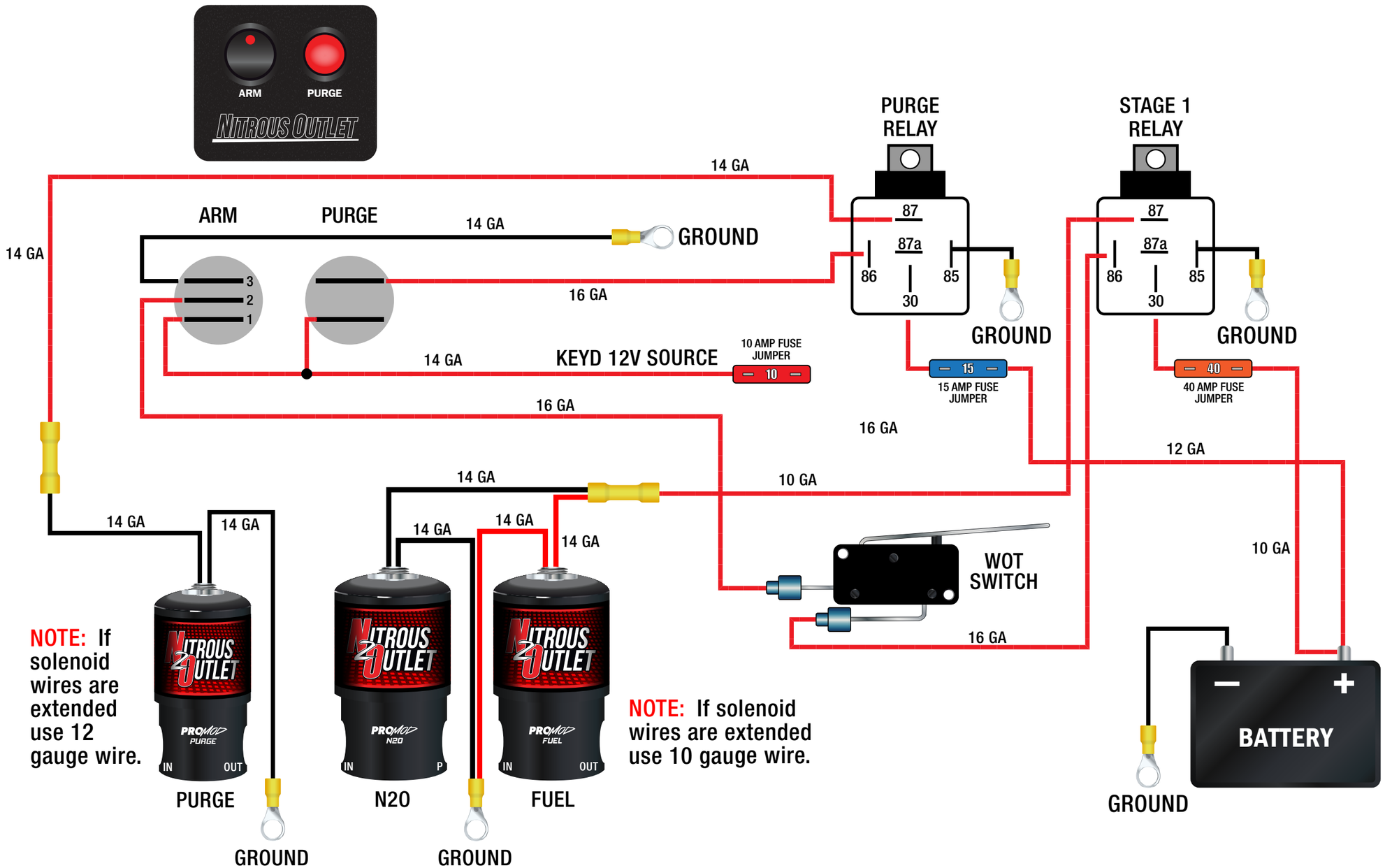

COMPANY / CONTACT:				PROJECT:	FILENAME:
NITROUS OUTLET				TWO BUTTON SWITCH PANEL WIRING DIAGRAM	TWO BUTTON SWITCH PANEL WIRING DIAGRAM.AI
CREATED DATE: 12/14/2021	REV #: 00	PAGES: 1 of 1	CONTACT INFORMATION: NITROUS OUTLET | 305 SOUTH 28TH STREET | WACO, TX 76634 | 254.848.4300 | CUSTOMERSERVICE@NITROUSOUTLET.COM | WWW.NITROUSOUTLET.COM		THIS DOCUMENT AND THE DESIGNS OR INFORMATION CONTAINED WITHIN ARE THE SOLE PROPERTY OF NITROUS OUTLET AND MAY NOT BE COPIED, DISTRIBUTED OR MADE AVAILABLE TO OTHERS WITHOUT PERMISSION.

NITROUS OUTLET