Oil Filter Block-Off Small & Big Block Chevy, Merlin
P/N 23782

PARTS LIST QTY.

1.	Block-Off Plate	1
2.	5/16-18 x 1 3/4 SHCS	2
3.	O-Rings	5
4.	Washers	2

INSTALLATION

This adapter is designed to be used with dry sump systems, external oil pumps or remote mount oil filters.

Assemble the components and note inlet & outlet ports as per drawing. Inlet & outlet are tapped for 10AN fittings.

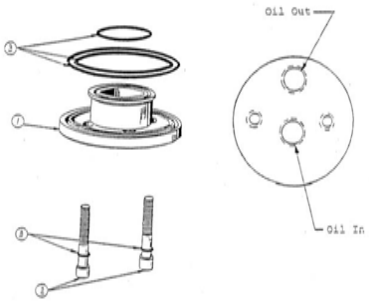

MOROSO PERFORMANCE PRODUCTS, INC
80 CARTER DR • GUILFORD, CT 06437
Phone: (203) 453-6571 • Fax: (203) 453-6906

Visit Us At www.moroso.com

Rev. D 23782INST
061611

Oil Filter Block-Off Small & Big Block Chevy, Merlin
P/N 23782

PARTS LIST QTY.

1.	Block-Off Plate	1
2.	5/16-18 x 1 3/4 SHCS	2
3.	O-Rings	5
4.	Washers	2

INSTALLATION

This adapter is designed to be used with dry sump systems, external oil pumps or remote mount oil filters.

Assemble the components and note inlet & outlet ports as per drawing. Inlet & outlet are tapped for 10AN fittings.

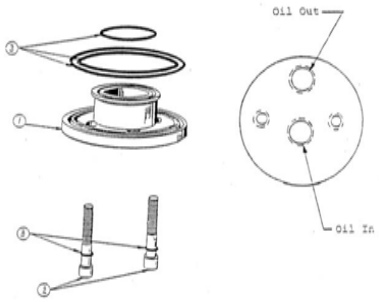

MOROSO PERFORMANCE PRODUCTS, INC
80 CARTER DR • GUILFORD, CT 06437
Phone: (203) 453-6571 • Fax: (203) 453-6906

Visit Us At www.moroso.com

Rev. D 23782INST
061611

Oil Filter Block-Off Small & Big Block Chevy, Merlin
P/N 23782

PARTS LIST QTY.

1.	Block-Off Plate	1
2.	5/16-18 x 1 3/4 SHCS	2
3.	O-Rings	5
4.	Washers	2

INSTALLATION

This adapter is designed to be used with dry sump systems, external oil pumps or remote mount oil filters.

Assemble the components and note inlet & outlet ports as per drawing. Inlet & outlet are tapped for 10AN fittings.

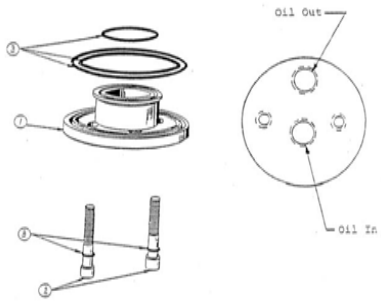

MOROSO PERFORMANCE PRODUCTS, INC
80 CARTER DR • GUILFORD, CT 06437
Phone: (203) 453-6571 • Fax: (203) 453-6906

Visit Us At www.moroso.com

Rev. D 23782INST
061611

Oil Filter Block-Off Small & Big Block Chevy, Merlin
P/N 23782

PARTS LIST QTY.

1.	Block-Off Plate	1
2.	5/16-18 x 1 3/4 SHCS	2
3.	O-Rings	5
4.	Washers	2

INSTALLATION

This adapter is designed to be used with dry sump systems, external oil pumps or remote mount oil filters.

Assemble the components and note inlet & outlet ports as per drawing. Inlet & outlet are tapped for 10AN fittings.

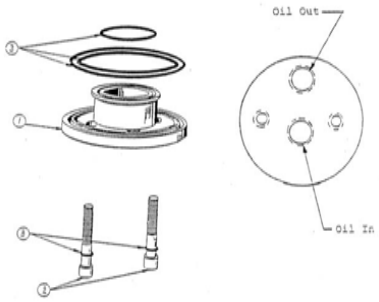

MOROSO PERFORMANCE PRODUCTS, INC
80 CARTER DR • GUILFORD, CT 06437
Phone: (203) 453-6571 • Fax: (203) 453-6906

Visit Us At www.moroso.com

Rev. D 23782INST
061611