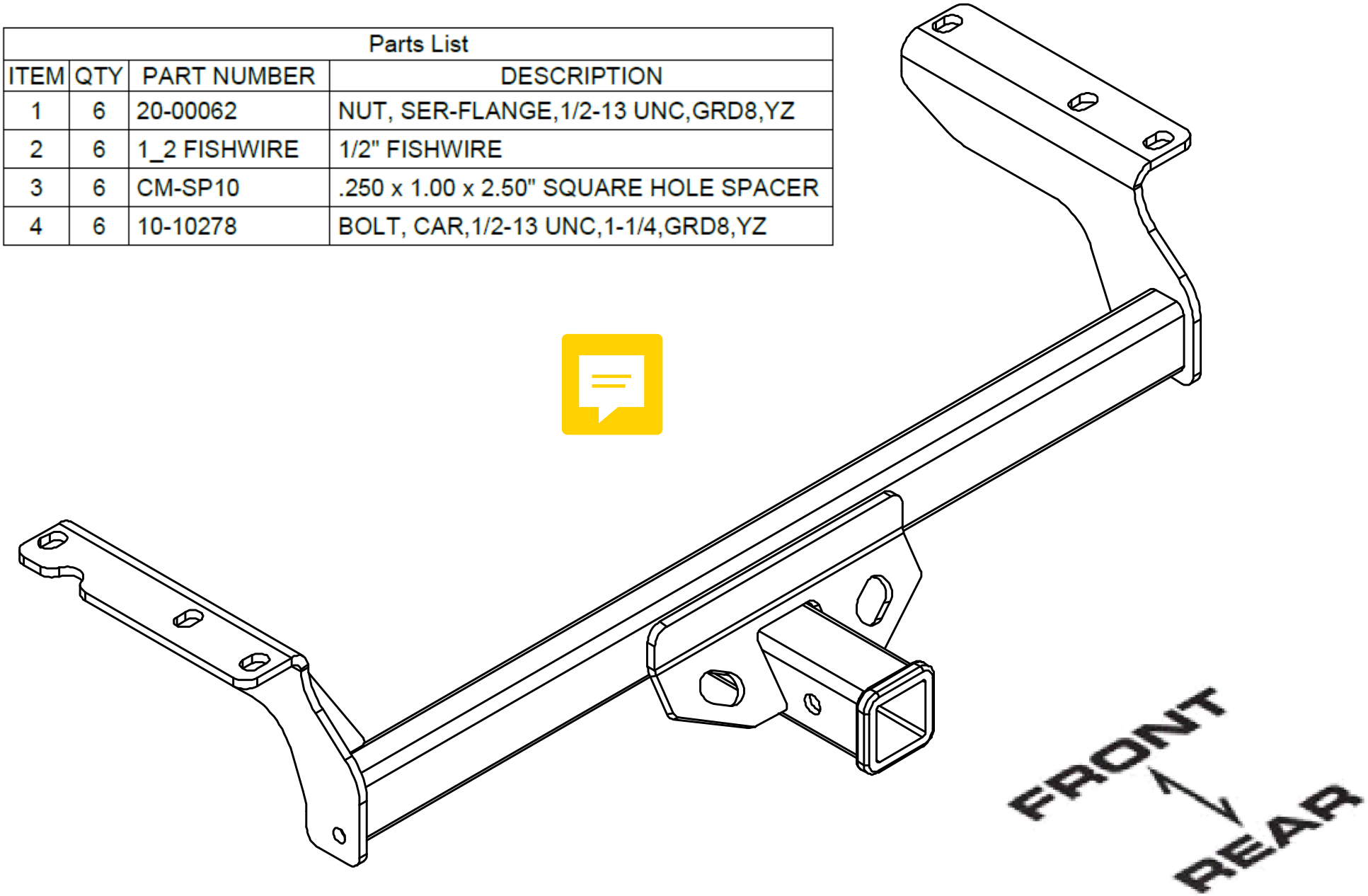Parts List			
ITEM	QTY	PART NUMBER	DESCRIPTION
1	6	20-00062	NUT, SER-FLANGE,1/2-13 UNC,GRD8,YZ
2	6	1_2 FISHWIRE	1/2" FISHWIRE
3	6	CM-SP10	.250 x 1.00 x 2.50" SQUARE HOLE SPACER
4	6	10-10278	BOLT, CAR,1/2-13 UNC,1-1/4,GRD8,YZ